HEAD PIECE DETAILS

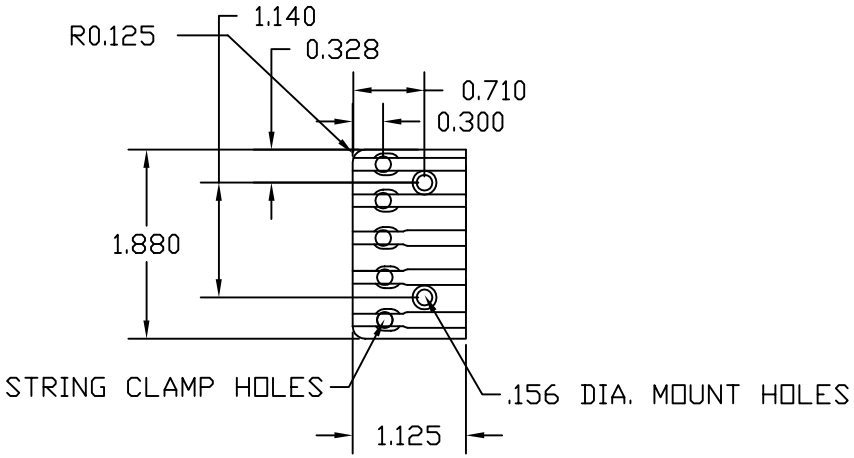

TOP VIEW

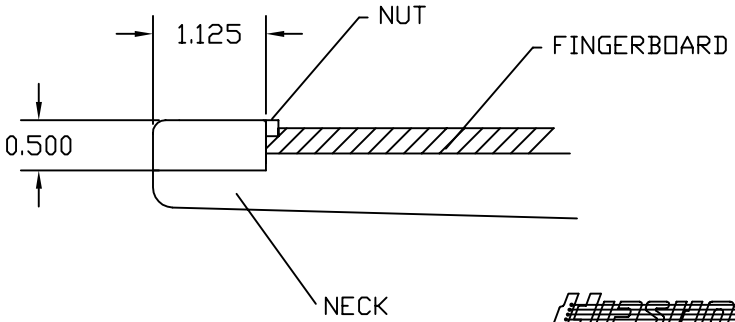

SIDE VIEW

HIPSHOT
8248 STATE ROUTE 96
Interlaken, NY 14847 U.S.A.
TEL:607-532-9404 FAX:607-532-9530
E-MAIL: hipshot@hipshotproducts.com

REV. 7/10